ALFUS

Luminary

FUSION S



Functional or street lighting fixture with an aerodynamic shape and a design that increases the heat dissipation surface, allowing the same fixture to achieve superior efficiency. Available in three different sizes with a wide wattage range, from 20W to 240W. The body consists of two detachable pieces that require no tools. This simplifies maintenance work by eliminating the need to handle the fixture at height. Compatible with any remote management system.

MAIN FEATURES:

High efficiency. Up to 145 lm/W real
3 different sizes. From 20W to 240W
Double cavity, Driver and Optical Group
Body removable in 2 pieces without tools
18 different light distributions
Standard Zhaga (Book 15)
Ready 4IoT. Ready for connectivity

APPLICATIONS:

Urban Roads and Streets
Pedestrian crossing
Cycle Lane and Narrow Tracks
Rural Roads
Parking

DETAILS:



Removable body, no tools required.



33% Extra Dissipation Surface.



Tilt-up opening. Double cavity.

Project sheet | CAD | Mounting instructions | BIM | HD image

BENITO

info@benito.com
tel. 93 852 1000

V. 2025-12-12 | The constant improvement and evolution of our products may result in some modifications of the technical specifications and characteristics of the products without prior notice.

SPECIFICATIONS :

Housing material:	Die-cast aluminium casting EN AC-47000. Type EN AC-43000, EN AC-43100, EN AC-43400, EN AC-44100, EN AC-47100 according to UNE EN 1706.
Diffuser (optic system enclosure):	5mm tempered glass, UV filtering. Polycarbonate available as an option.
Fixing elements:	18/8 Stainless Steel - AISI 304
Housing:	Double Cavity: Driver / LED Module
Sealing gaskets:	Silicone Foam
IP rating (luminaire):	IP66
IP rating (optic system):	IP66
IK rating (impact resistance):	IK09 - IK10
LEDs thermal dissipation:	Heat dissipation through the luminaire body, without external fins or conductive fluids. Passive heat dissipation through convection, ensuring thermal contact between the LED modules through highly conductive heat transfer material.
Anti-condensation valve:	Pressure compensation valve that ensures moisture evacuation, preventing condensation and maintaining the luminaire's IP rating.
Paint and finishes:	Polyester powder coating, electrostatically sprayed and oven-sublimated. Corrosion-resistant.
Colour:	Color RAL 9022
Mounting:	Post - Top Fixation Ø60mm (Optional; Ø76mm and through accessories Ø48mm)
Tilt range:	Adjustable luminaire from -15º to 15º inclination.
Maintenance:	Easy to open without any special tools. Replaceable modules: LEDs, drivers, SPDs.
Recommended mounting height:	4 - 7 m
Driver:	Dimmable and programmable constant current driver with different levels (0-10V, 1-10V, DALI2, NFC). Built into the luminaire, pre-wired on a steel plate. .
Flow Reduction:	Double level with control line, different timed levels or virtual midnight, flow reduction at the head.
Ready4IOT - Connectivity:	Zhaga Base (Book 18) - D4i. (Optional). NEMA 5,7 Pins Base (Optional). Bottom side Presence Sensor on Zhaga Base (Book 18) - D4i. (Optional).
Surge protection device (SPD):	Type T2+T3, 10-20kV and 20kA transient surge protector. Series connection with thermofuse, disconnection for a more effective protection at the end of the SPD service life. (Optional SPD Full Permanent Surge Protector >264Vac to <170VAc).
DarkSky Approved	

DRAWING:

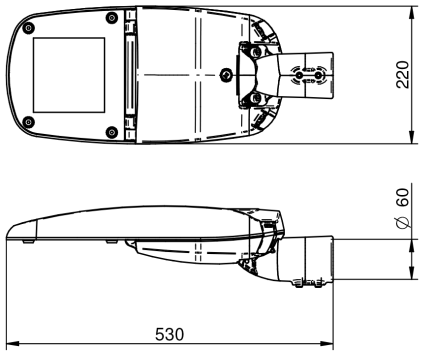

INSTALLATION:



V. 2025-12-12 | The constant improvement and evolution of our products may result in some modifications of the technical specifications and characteristics of the products without prior notice.

Ámbar 2200 K 2700 K 3000 K 4000 K 5000 K

lm/€ TRIPLE PROTECTION

TECHNICAL DATA:

	REF.	Nº LEDs	Power W	I Driver mA	Real luminous flux (T) =85ºC) Flux lm	Real luminous flux (T) =85ºC) Efficacy lm/W	Initial luminous flux (T) =25ºC) Flux lm	Initial luminous flux (T) =25ºC) Efficacy lm/W
FUSION S	ALFUS40	8	20	750	2820	141	3215	161
		16	30	563	4242	141	4836	161
		16	40	750	5642	141	6432	161
		16	50	940	6950	139	7950	159

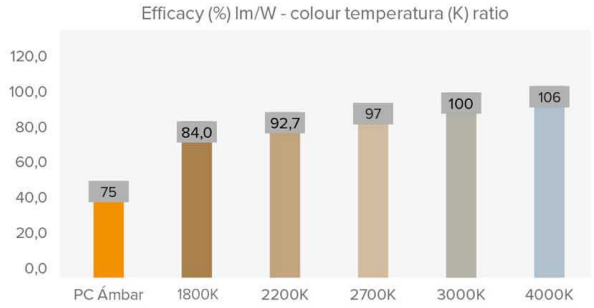

Luminous fluxes and efficiencies at 3000K and CRI>70 - Tolerance ±3%

PHOTOMETRY:

Asymmetric Extensive (AE)

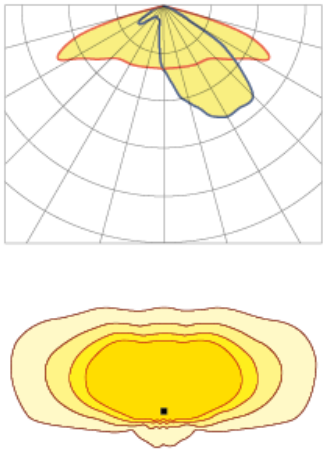

Asymmetric Extensive Narrow (A2)

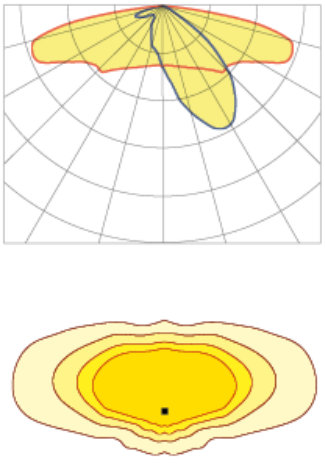

Asymmetric (A4)

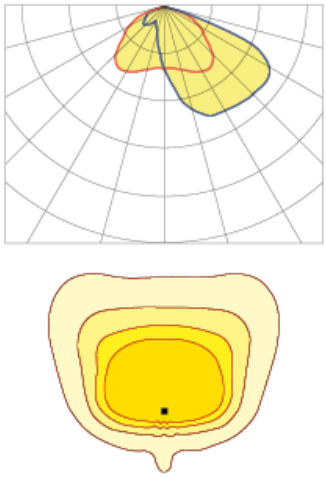

Asymmetric Extensive Frontal (A1)

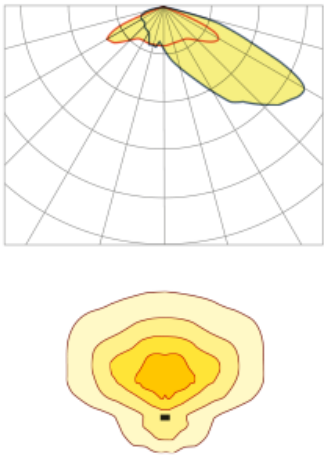

*Show 4 recommended lighting distributions. Refer to the 18 typologies.

V. 2025-12-12 | The constant improvement and evolution of our products may result in some modifications of the technical specifications and characteristics of the products without prior notice.

LEDs MODULE:

LEDs module:	BENITO Zhaga format with 8 LEDs. See color temperatures, CRI, and light distributions. (NTC temperature probe optional).
Replaceable module:	Yeah
LED:	5050
Number of LEDs:	8 - 16
PCBs format:	1 or 2 Zhaga (Book 15) 2x4
LED nominal efficacy:	172
Colour temperature:	Amber PC - 1K8, 2K2, 2K7, 3K, 4K, 5K
Colour rendering index CRI:	>70 (optional >80)
Average LED useful time L90B10:	L90B10 >100,000 hours

OPTIC SPECIFICATIONS:

Optic system:		PMMA 2x2 lenses
Light distributions:		18 light distribution curves
Upward light output ratio ULOR:		0%
Downward light output ratio DLOR:		100%
Glare index:		Between D5 and D6 (depending on the light distribution)
Luminous intensity category:		Between G*4 and G*6 (depending on the light distribution)
Luminous flux CIE nº3:		>95% (See 18 Light Distributions).
Photobiological safety:		RG0 (risk-free)
Initial luminous flux Tj=25ºC (up to):	lm	7950
Initial luminaire efficacy Tj=25ºC (up to):	lm/W	161
Real luminous flux Tj=85ºC (UNE EN 13032-4) (up to):	lm	6950
Real luminaire efficacy Tj=85ºC (UNE EN 13032-4) (up to):	lm/W	141

ELECTRIC SPECIFICATIONS:

Nominal maximum power (LEDs):		45
Maximum power consumed (luminaire):	W	50
Power range:	W	20-50W
Maximum current of LED:	mA	<470 (LED Current = 50% Driver Current).
Power supply protection classes IEC:		Class I and II
Surge protection device (SPD):		Type 2 and Type 3, 10-20kV and 20kA transient surge protector. Series connection with thermal fuse disconnector for a more effective protection at the end of its service life.
Common and differential mode protection (SPD) Udc:	kV	10
Max current (8/20) (SPD):	kA	20
Thermal phase disconnection (SPD):		Yes
Input voltage:	Vac	220-240
Input voltage (max rate):	Vac	198-264
Input frecquency:	Hz	47-63
Starting current:	A	<65
Duration of the starting voltage peak:	ms	<0.3
Driver efficacy:		>90%
Power factor 100% consumption:		>0.98
Power factor 50% consumption:		>0.95
Total harmonic distortion (THD):		<10
Power consumption on standby mode:	W	<0.4
Energy class:		C (According to EU Regulation 2019/2015 EPREL) - A++ IPEA>1.15

OPERATING CONDITIONS:

Average LED useful time L90B10:	hours	>100,000
Average driver useful life to Tp <70ºC:	hours	100,000
Average luminaire useful life L90B10 (TM-21):	hours	>100,000
Ambient temperature (Ta):	ºC	From -35°C to +50°C
Aerodynamic resistance (CxS):	m2	0.035
Vibration test (15Hz 3 axis):		
Guarantee:	years	5 (extensible up to 10 years)

PACKAGING DIMENSIONS:

Net weight	kg	6.8
Gross weight	kg	7
Luminaire dimensions (LxWxH)	mm	530x220x128
Packaging dimensions (LxWxH)	mm	565x230x150
Pieces per box		1
Quantity per container 20ft		1400
Quantity per container 40ft		2912

CERTIFICATES:

Security certificates:	EN 60598-1 / EN 60598-2-3 / EN 62493 / IEC 62471
EMC certificates:	EN 55015 / EN 61547 / EN 61000-3-2 / EN 61000-3-3 / EN 61347-2-13 / EN 61347-1 / EN 62384
Other certifications:	EN 13032-4

Company Certifications

ISO 9001 ISO 50001 ISO 14001 ISO 45001

V. 2025-12-12 | The constant improvement and evolution of our products may result in some modifications of the technical specifications and characteristics of the products without prior notice.

BENITO

info@benito.com
tel. 93 852 1000